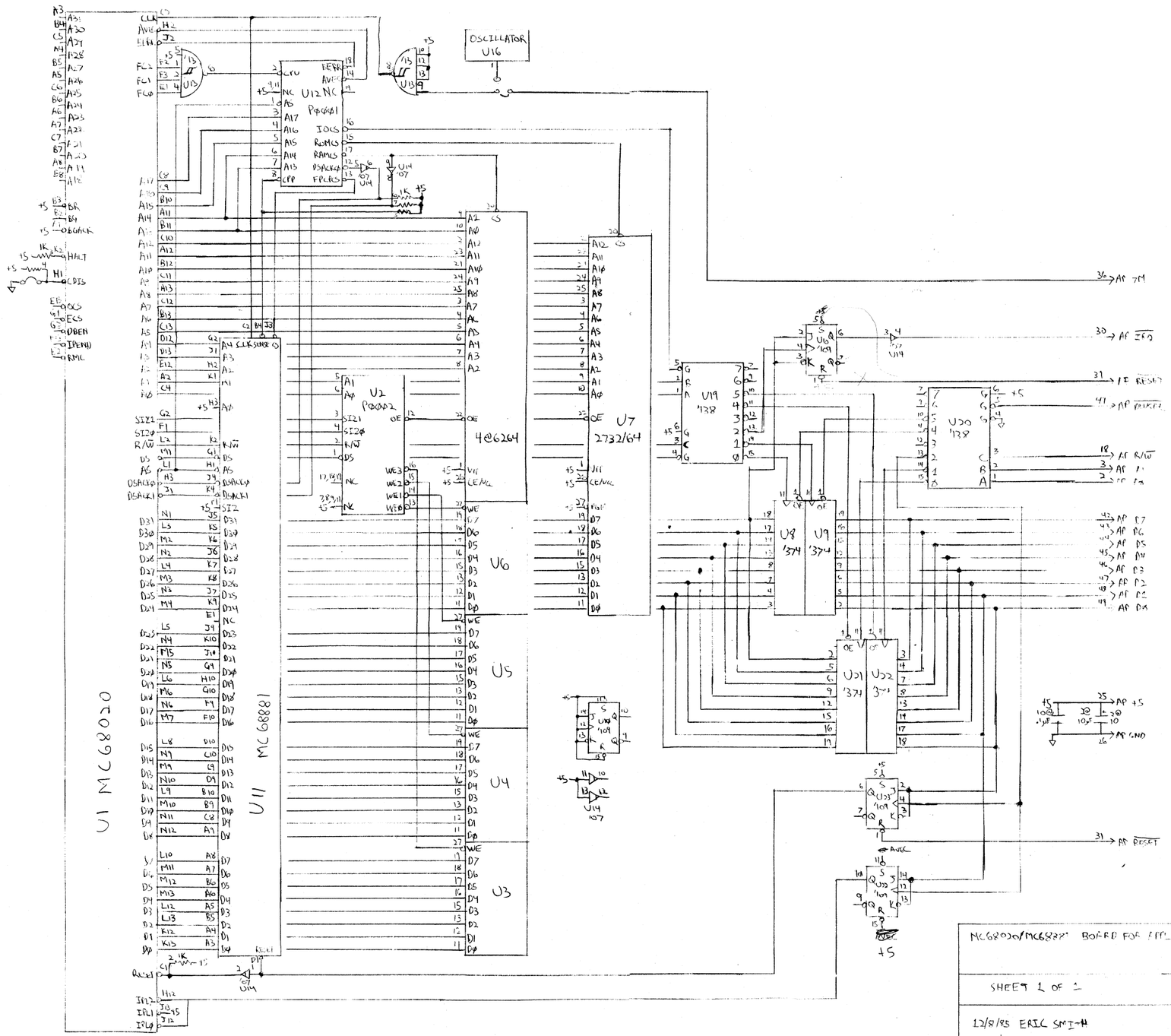

MC68020/MC68881 BOARD FOR APPLE II SLOT

SHEET 1 OF 1

12/8/85 ERIC SMITH