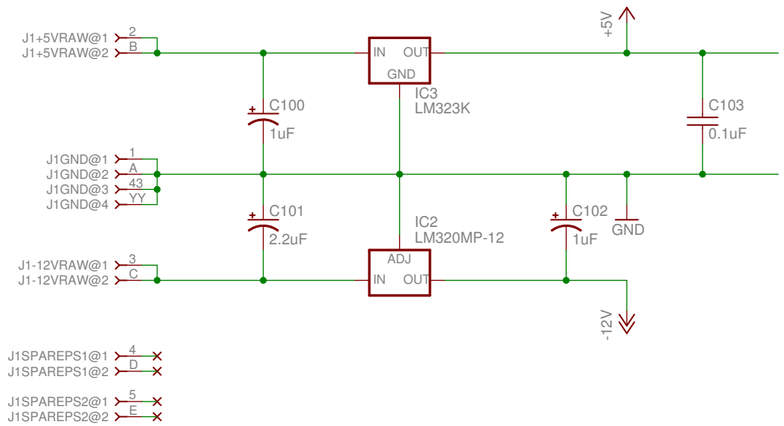

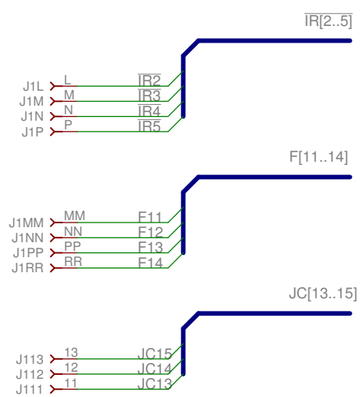

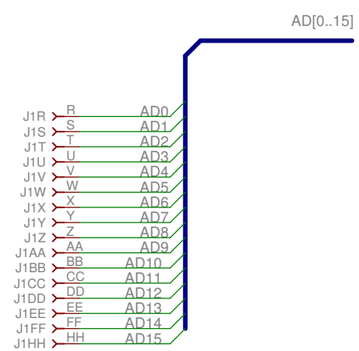

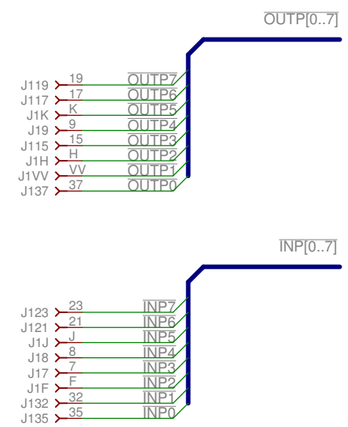

Unused gates

Inputs should be connected to GND,
a pullup resistor, or a logic signal

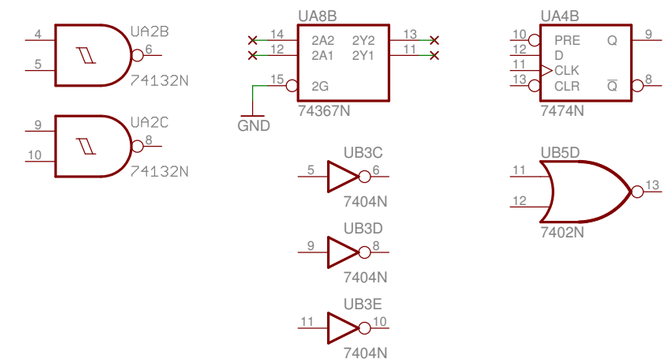

Unused bus signals

Project Support Engineering
PAC-MP-001 Pacer Processor Board
System Bus and Power

Reverse-engineered by Eric Smith
May be incomplete and/or incorrect
Provided AS-IS with no warranty, express or implied
Copyright © 2015 Eric Smith <spacewar@gmail.com>

File: pac-mp-001	REV:
Date: 1/3/15 12:11 AM	Sheet: 1/4

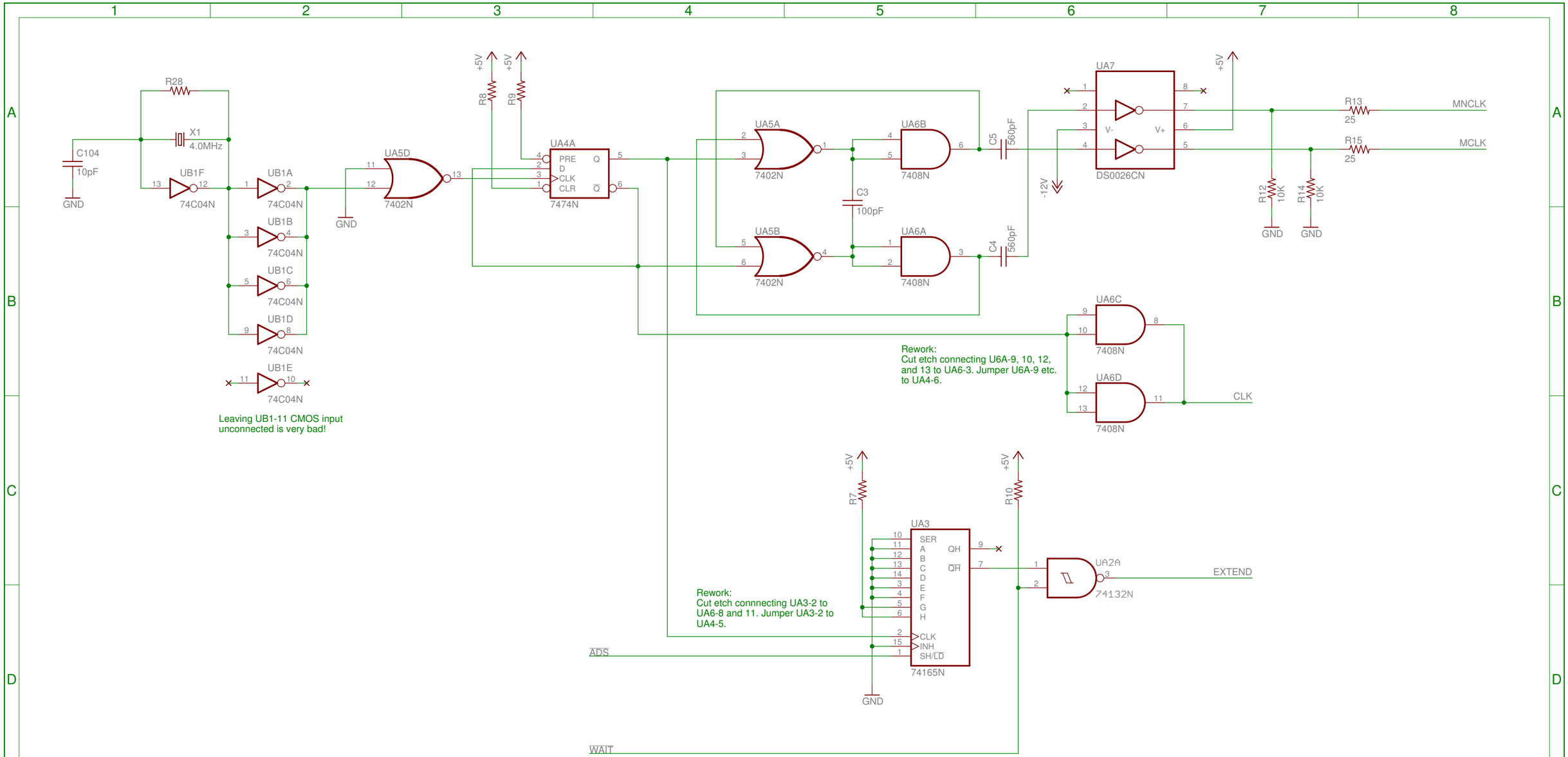

Project Support Engineering
PAC-MP-001 Pacer Processor Board
Clock

Reverse-engineered by Eric Smith
May be incomplete and/or incorrect
Provided AS-IS with no warranty, express or implied
Copyright © 2015 Eric Smith <spacewar@gmail.com>

File: pac-mp-001	REV:
Date: 1/3/15 12:11 AM	Sheet: 2/4

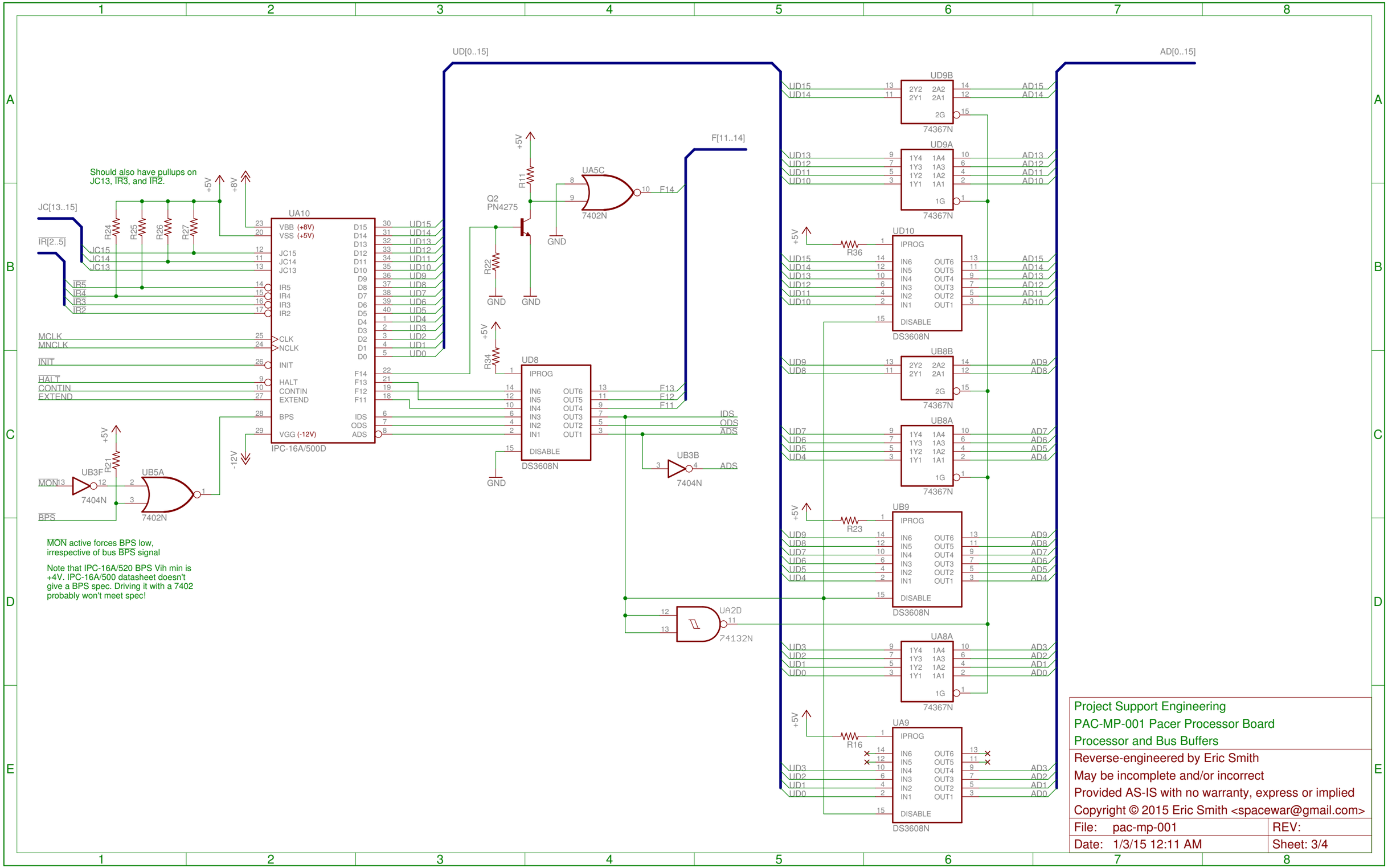

Project Support Engineering
PAC-MP-001 Pacer Processor Board
Processor and Bus Buffers

Reverse-engineered by Eric Smith
May be incomplete and/or incorrect
Provided AS-IS with no warranty, express or implied
Copyright © 2015 Eric Smith <spacewar@gmail.com>

File: pac-mp-001	REV:
Date: 1/3/15 12:11 AM	Sheet: 3/4

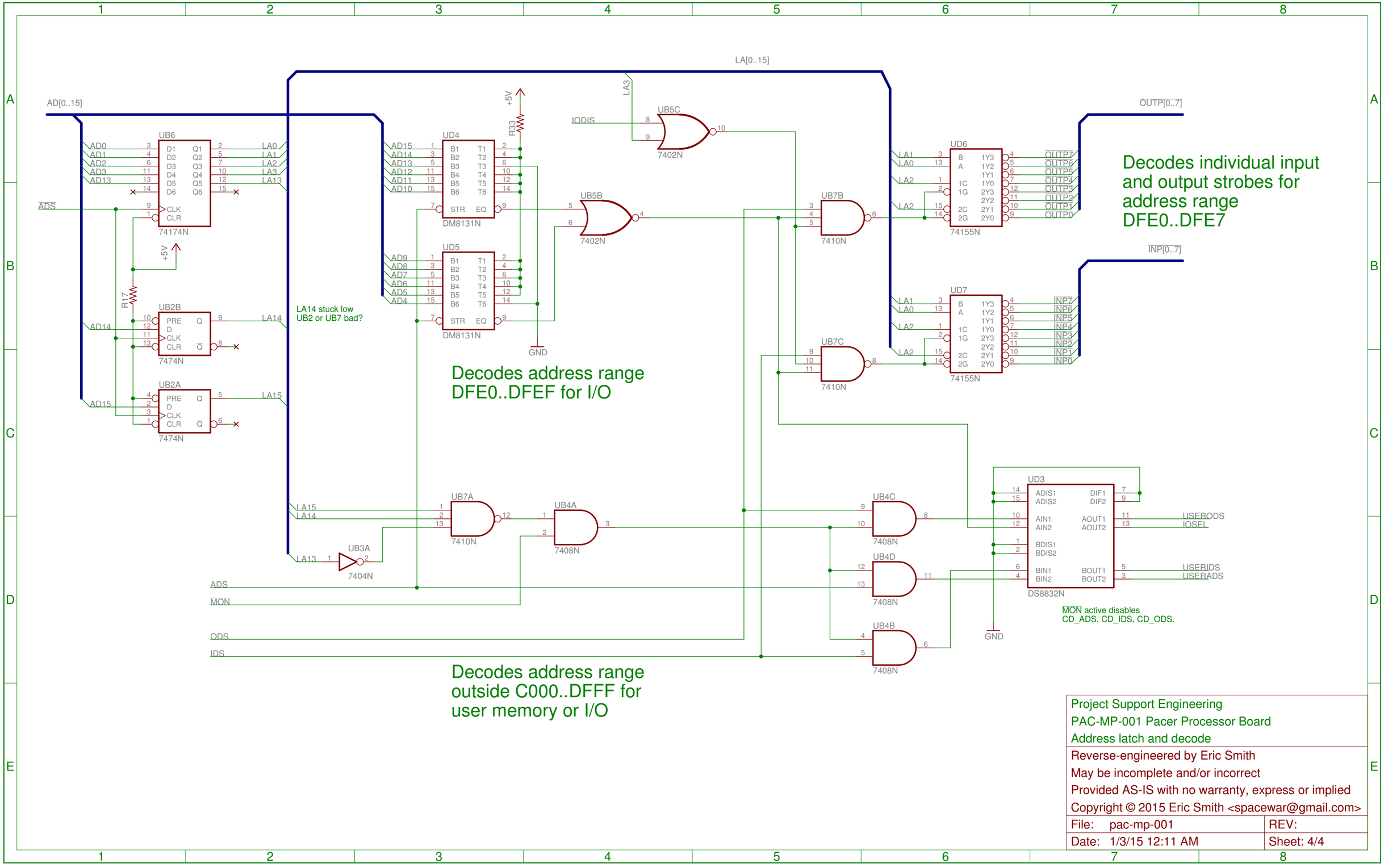

Project Support Engineering
PAC-MP-001 Pacer Processor Board
Address latch and decode

Reverse-engineered by Eric Smith
May be incomplete and/or incorrect
Provided AS-IS with no warranty, express or implied
Copyright © 2015 Eric Smith <spacewar@gmail.com>

File: pac-mp-001	REV:
Date: 1/3/15 12:11 AM	Sheet: 4/4